LASER LEVEL TRANSMITTER
TL400-V / TL400-I

DATASHEET – V3.2x

1 INTRODUCTION

TL400 is a non-intrusive level transmitter with no moving parts, using an infrared laser technology (~920 nm) that is completely safe to the human eye (LASER CLASS-1). Its measurement principle is based on ToF (Time of Flight), providing an accurate and reliable distance measurement, regardless of the color or transparency of the surface[1] . It can be used to measure from grains and solids to transparent liquids such as water and diesel.

It has a robust housing, withstanding pressures up to 6 bar, and excellent resistance to flammable materials such as diesel, gasoline, or alcohol.

With a measurement capacity up to 4 meters and 1 Hz sampling, **TL400** is an excellent alternative to level sensors based on ultrasonic, capacitive, or floating technology since it does not need to be in contact with the surface to be measured.

The transmitter has a dedicated filter for non-static tank applications based on machine learning algorithms that have been validated in real-life situations and have configurable parameters for specific applications.

The sensor allows you to configurate the opening angle, ranging from 15° degrees for irregular tank or reservoir applications to 27° degrees for tanks where the base diameter is half the height to be measured.

TL400 has a BLE (Bluetooth Low Energy) interface. By using it to pair the equipment with the **SigNow** software or app, available for Windows computers and Android and iOS smartphones, you can:

- Configure the analog output, according to the specific application.
- Configure the opening angle of the sensor.
- Customize the tank with up to 20 points in level percentage.
- Perform sensor diagnostics in real time.
- Configure the dynamic filter based on the application.
- Update the firmware to the most current version, which will always be available on **NOVUS** website.

The sensor can retransmit the analog output in **Level**, **Volume**, or **Distance**. Level and distance are set in your preferred unit (mm, cm, m, inches, or feet) and volume is always displayed in percent.

The figure below shows **TL400** in an application:

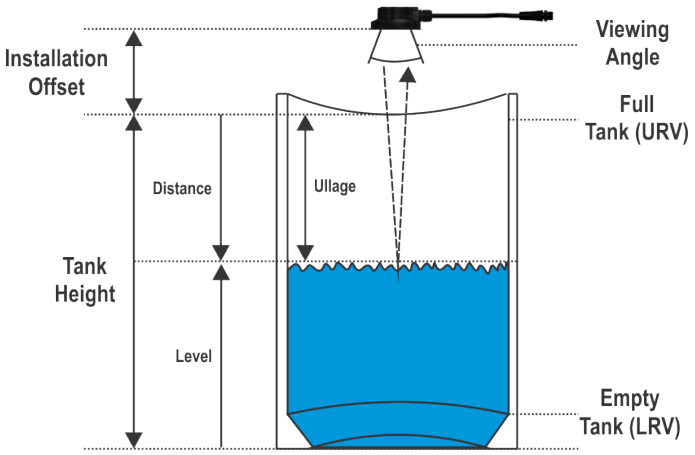

Figure 1

[1] In sunlit environments or in small to medium sized tanks that have reflective walls, the sensor may have difficulty to make an accurate measurement. See recommendations for use and application.

2 DIMENSIONS

2.1 TL400-V

The figures below show the dimensions of the **TL400-V** and the gasket:

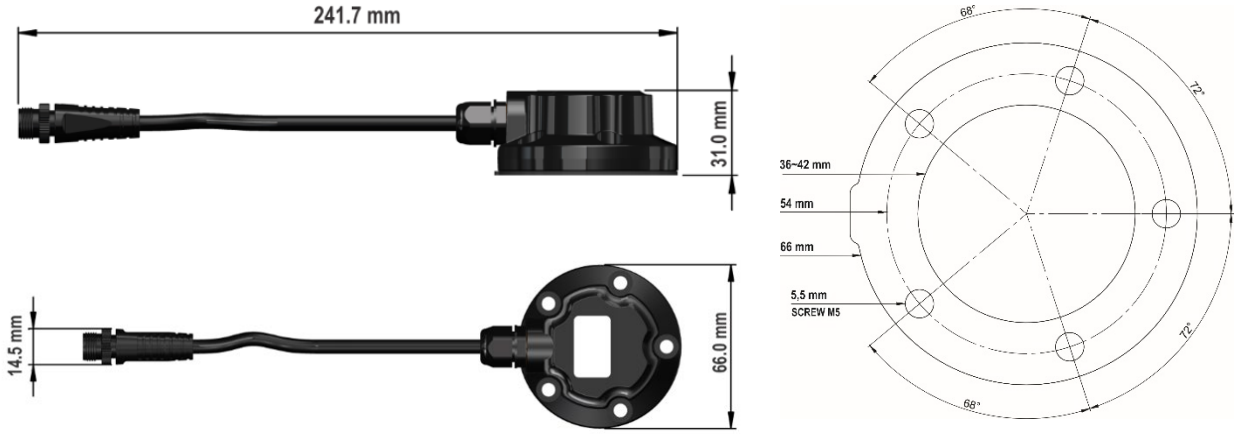

Figure 2

2.2 TL400-I

The figures below show the dimensions of the **TL400-I** and the gasket:

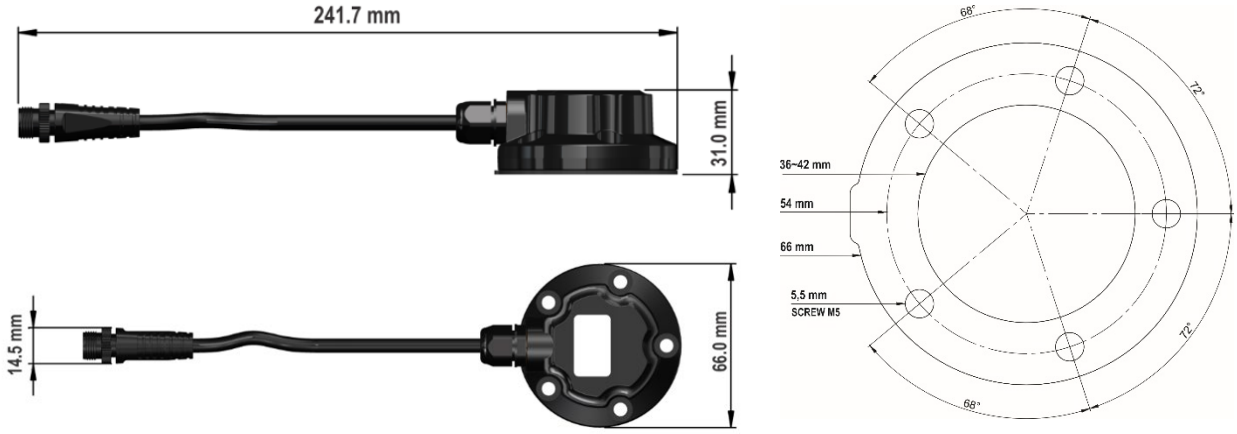

Figure 3

2.3 DIAMETER FOR LASER PASSAGE

The figure below shows the maximum and minimum hole diameters required to ensure laser passage, so as not to compromise the installation of the sensor in the tank or reservoir:

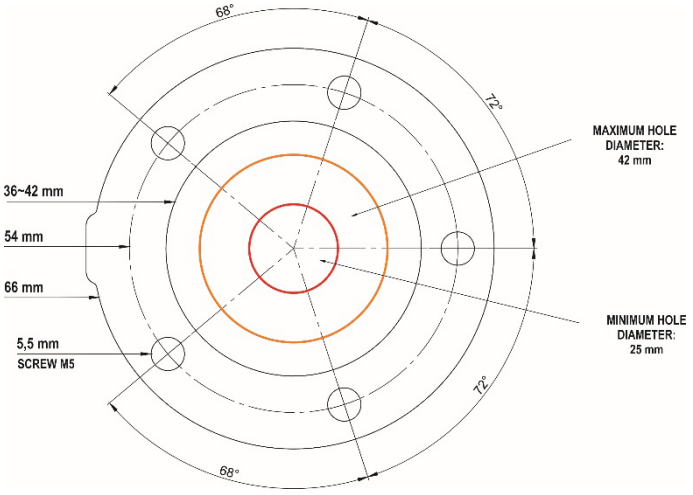

Figure 4

2.4 5-HOLE TO 4-HOLE ADAPTER (ACCESSORY)

The figure below shows the dimensions and drilling of the adapter for attaching the equipment:

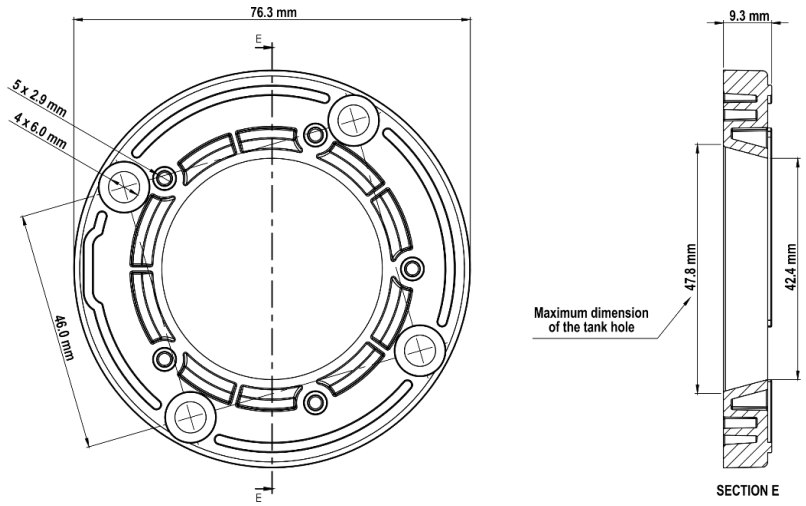

Figure 5

This adapter must be purchased separately:

- 4-hole adapter for **TL400** (Order code: *8802100300*)

3 ELECTRICAL CONNECTIONS

3.1 INSTALLATION RECOMMENDATIONS

- Electronic and analog signal drivers must run the plant separately from the output and power leads. If possible, in grounded conduits.
- The power supply for the electronic instruments must come from a proper power grid for instrumentation.
- It is recommended to use RC FILTERS (noise suppressors) in contactor coils, solenoids, etc.
- In control applications, it is essential to consider what can happen when any part of the system fails. The device's internal security features do not guarantee full protection.

3.2 TL400-V

The figure below shows how to make the electrical connection of the **TL400-V**:

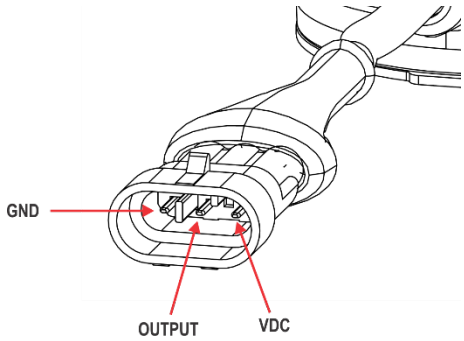

Figure 6

3.2.1 ANALOG INPUT CONNECTION

Below is an example of how to connect the output to an analog input:

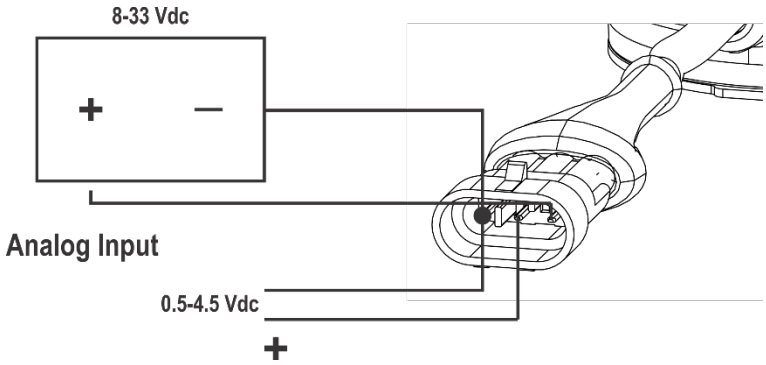

Figure 7

3.3 TL400-I

The output connector is a M12 type with the following wiring connections:

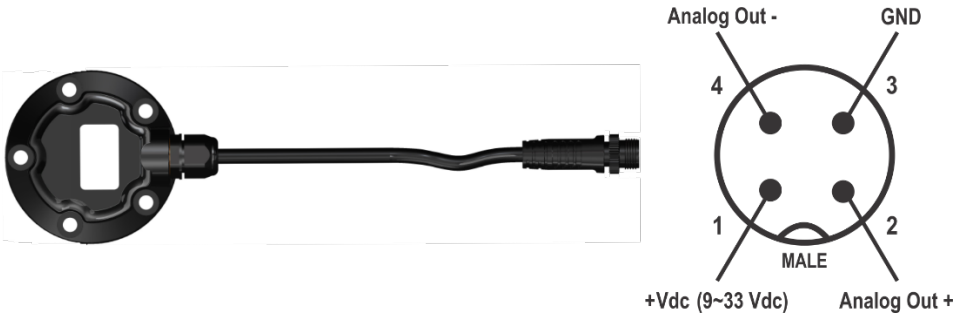

Figure 8

TL400-I has 2 accessory cables, which can be purchased separately:

- 1 m PVC sensor cable 4-pin | M12 female connector (Order code: *8806065000*)
- 3 m PVC sensor cable 4-pin | M12 female connector (Order code: *8806065100*)

The connection to the M12 female connector must be made in accordance with the following wiring connections:

1 m CABLE

Figure 9

3 m CABLE

Figure 10

3.3.1 ANALOG INPUT CONNECTION

Below is an example of how to connect the output to an analog input:

1 m CABLE

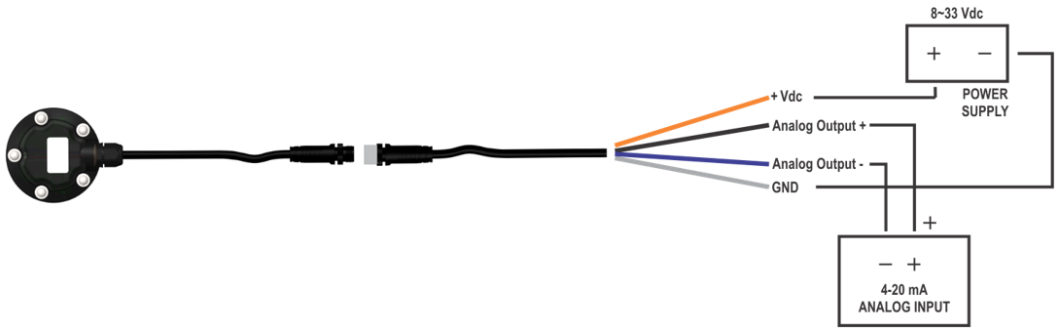

Figure 11

3 m CABLE

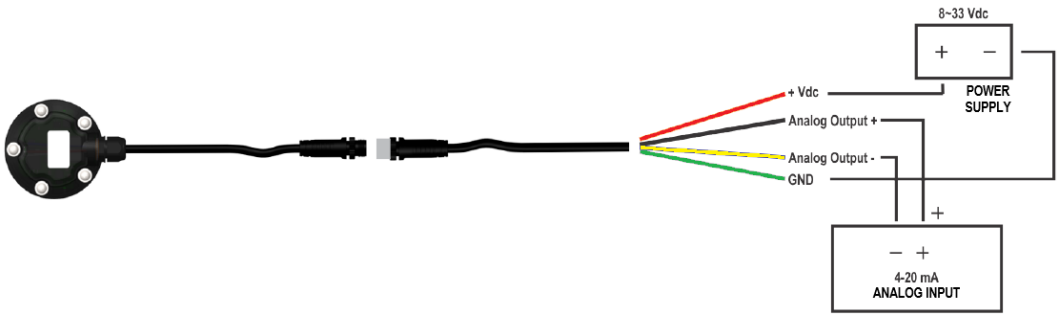

Figure 12

4 TECHNICAL SPECIFICATIONS

4.1 TL400-V

FEATURES	TL400-V
Dimensions	241.7 x 66 x 31 mm
Distance measurement	Configurable from 0 to 4000 mm
Accuracy	Maximum of 30 mm but can reach 2 mm if in good measuring conditions[2]
Resolution	1 millimeter
Blind spot	50 millimeters
Sampling	1 Hz
Sensor start-up	2.5 seconds
Output	0.5 – 4.5 Vdc with 1 mV resolution.
Assembly	Standard SAE 5 holes or adapter for standard 4 holes.
Consumption	<70 mA @ 12 V or <40 mA @ 24 V
Power supply	8~33 Vdc
Storage temperature	-20 to 80 °C (-4 to 176 °F)
Operation temperature	-20 to 80 °C (-4 to 176 °F)
Protection index	IP68
Housing	Polycarbonate
Software	**SigNow** (for PCs and smartphones)
Certifications	CE, LASER CLASS 1, ISO 16750-2

Table 1

4.2 TL400-I

FEATURES	TL400-I
Dimensions	241.7 x 66 x 31 mm
Distance measurement	Configurable from 0 to 4000 mm
Accuracy	Minimum of 30 mm but can reach 2 mm if in good measuring conditions[3]
Resolution	1 millimeter
Blind spot	50 millimeters
Sampling	1 Hz
Sensor start-up	2.5 seconds
Connector	M12 with 4 pins
Output	4-20 mA with 0.01 mA resolution
Assembly	Standard SAE 5 holes or adapter for standard 4 holes
Consumption	<70 mA @ 12 V or <40 mA @ 24 V
Power supply	8~33 Vdc
Storage temperature	-20 to 80 °C (-4 to 176 °F)
Operation temperature	-20 to 80 °C (-4 to 176 °F)
Protection index	IP68
Housing	Polycarbonate
Software	**SigNow** (for PCs and smartphones)
Certifications	CE, LASER CLASS 1, ISO 16750-2

Table 2

[2, 3] A good measuring environment consists of a tank where the sensor can work at a maximum opening angle of 27°, without the incidence of sunlight. Factors that worsen the measurement conditions involve the reflectivity of the walls and bottom of the tank and the incidence of sunlight.

4.3 FACTORY DEFAULT

Both **TL400** models come factory configured as follows:

SECTION	FACTORY DEFAULT	
	PARAMETER	VALUE
GENERAL	**Level and distance: Unit**	Centimeters
	Installation Offset	5.0 centimeters
	Tank height	395.0 centimeters
	Reverse output polarity	No
	Output minimum value	0.0 centimeters
	Output maximum value	400.0 centimeters
INPUT	**Magnitude related to the analog output**	Level
	Level and distance: Unit	Centimeters
	Installation Offset	5.0 centimeters
	Tank height	395.0 centimeters
	Field of view	27°
	Reading mode	Long
OUTPUT	**Error action on the analog output**	High
	Reverse output polarity	No
	Output minimum value	0.0 centimeters
	Output maximum value	400.0 centimeters
ADVANCED FILTER	**Size of the main vector**	100
	Size of the distance vector	80
	Median index	0
	Median size	40
	Show blocking filter parameters	No
	Acceptance percentage[3]	0.10 %
	Percentage increase[6]	0.05 %
	Acceptance counts[7]	8
	First-order filter constant[8]	2
SECURITY	**Password**	No password
COMMUNICATION	**Device Tag**	TL400

Table 3

4.4 CERTIFICATIONS

CE MARK

This is a Class A product. In a domestic environment, this product may cause radio interference in which case the user may be required to take adequate measures.

LASER CLASS 1

The radiation used by the sensor is classified by IEC 60825-1:2014 as CLASS 1 LASER PRODUCT and does not present a risk to the human eye as long as you do not make any changes not described in the manual.

[3, 6, 7, 8] Displayed when setting the «**Show block filter parameters**» parameter to «**Yes**».

5 WARRANTY

Warranty conditions are available on our website www.novusautomation.com/warranty.