We Measure, We Control, We Record

TxRail-USB

TEMPERATURE TRANSMITTER – USER MANUAL – V2.0x G

1. INTRODUCTION

TxRail-USB is an advanced programmable temperature transmitter with detachable connectors for DIN rail mounting. Its microprocessor technology accepts configuration via USB, which allows you to select the input type, the measurement range, the output type, and to perform the calibration process. The output can be configured via software for 4-20 mA or 0-10 Vdc.

The output current or voltage is linearized according to the selected input sensor and adjusted to the configured range.

2. SPECIFICATIONS

Sensor input: User defined. The supported sensors are listed in **Table 1**, along with their maximum ranges.

Thermocouples: Types J, K, R, S, T, N, E and B, according to IEC 60584 (ITS-90). Impedance >> 1 MΩ

Pt100: Excitation: 0.8 mA, α = 0.00385, according to IEC 60751 (ITS-90).

For 2-wire sensors, tie terminals 3 and 4 together.

Pt1000: 3-wire type, Excitation: 0.8 mA, α = 0.00385, according to IEC 60751 (ITS-90).

For 2-wire sensors, tie terminals 3 and 4 together.

NTC $R_{25°C}$: 10 kΩ ±1 %, $B_{25/85}$ = 3435

Voltage: 0 to 50 mVdc. Impedance >> 1 MΩ

0 to 100 mVdc. Impedance >> 1 MΩ (*)

(*) Feature available for devices with firmware version starting at V2.0x.

Sensor Type	Maximum Measurement Range	Minimum Measurement Range
Voltage	0 to 50 mV	5 mV
Voltage	0 to 100 mV	10mV
Thermocouple K	-150 to 1370 °C	100 °C
Thermocouple J	-100 to 760 °C	100 °C
Thermocouple R	-50 to 1760 °C	400 °C
Thermocouple S	-50 to 1760 °C	400 °C
Thermocouple T	-160 to 400 °C	100 °C
Thermocouple N	-270 to 1300 °C	100 °C
Thermocouple E	-90 to 720 °C	100 °C
Thermocouple B	500 to 1820 °C	400 °C
Pt100	-200 to 650 °C	40 °C
Pt1000	-200 to 650 °C	40 °C
NTC	-30 to 120 °C	40 °C

Table 1 – Sensors accepted by the transmitter

Switch-on delay: < 2.5 s. The accuracy is only guaranteed after 15 minutes.

Reference terms: Ambient: 25 ° C; voltage: 24 Vdc, load: 250 Ω; settling time: 10 minutes.

Temperature effect: < ±0.16 % / 25 °C

Response time: Typical 1.6 s.

Maximum allowable voltage at input terminals: 3 V

RTD current: 800 μA

RTD cable resistance effect: 0.005 °C / Ω

Maximum allowable cable resistance for RTD: 25 Ω

Sensor Type	Typical Accuracy	Maximum Accuracy
Pt100 / Pt1000 (-150 to 400 °C)	0.10 %	0.12 %
Pt100 / Pt1000 (-200 to 650 °C)	0.13 %	0.19 %
K, J, T, E, N, R, S, B	0.1 % (*)	0.15 % (*)
mV	0.1 %	0.15 %
NTC	0.3 °C	0.7 °C

Table 2 – Calibration error, percentage of the full measurement range

(*) Add cold junction compensation: < ± 1 °C

Power supply influence: 0.006 % / V typical (percentage of the full measure range).

Output (4-20 mA): 4-20 mA or 20-4 mA current, 2-wired; and proportional to the configured range.

Output resolution (4-20 mA): 2 μA

Output (0-10 Vdc): 0-10 Vdc or 10-0 Vdc voltage, and proportional to the configured range.

Output resolution (0-10 Vdc): 0.0025 V (12 bits)

Power supply: 10 to 30 Vdc (output 4-20 mA) and

12 to 30 Vdc (output 0-10 Vdc).

Maximum load (RL): RL (max.) = (Vdc – 10) / 0.02 [Ω]

Where: Vdc = Power supply voltage (10-30 Vdc)

Operating temperature: -40 to 85 °C

Humidity: 0 to 90 % RH

Electromagnetic compatibility: EN 61326-1:2006

No electrical isolation between input and output.

Internal protection against polarity inversion.

Cold junction compensation for thermocouples.

Connection wire cross section: 0.14 a 1.5 mm²

Screw tightening: 0.8 Nm

Housing: ABS UL94-HB

Certification: CE, UKCA

3. CONFIGURATION

When you need to change the configuration, you should use **SigNow** software, **TxConfig II** software, or the **SigNow** application.

On the **NOVUS** website, you can download any of the configuration software for free. For installation, simply run the ***SigNowSetup.exe*** or ***TxConfigIISetup.exe*** file and follow the installer instructions.

To configure the device through the software, you must use the transmitter configuration interface (USB cable), which can be purchased from the manufacturer or its authorized representatives:

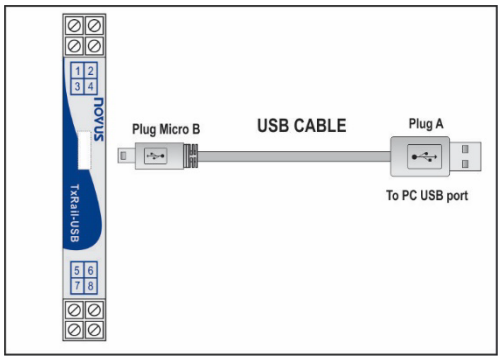

Figure 1 – USB cable connection

During the setup, the transmitter is powered by the USB, not requiring an external power supply.

The transmitter setup can also be made by connecting it to the loop, using the loop power supply. There is no electrical isolation between the transmitter and the communication port (interface). It is not recommended to configure it with the sensor connected to the process. See **Figure 2**.

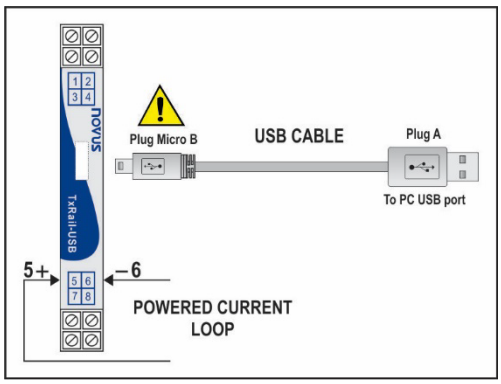

Figure 2 – USB cable connections – Loop powered

After connecting the device and the PC, simply run **SigNow** or **TxConfig II**.

SigNow app can be downloaded for free from *Google Play Store*.

To configure the device via the application, you must use an On The Go (OTG) adapter. The procedure for using this adapter will be explained in the SMARTPHONE CONNECTIONS section.

There you will also find more information on how to connect the **TxRail-USB** to the smartphone itself and set up the device.

⚠	**The USB communication port (interface) of the TxRail-USB is not electrically isolated from the transmitter input.**

3.1 SOFTWARE AND APPLICATION

3.1.1 SIGNOW SOFTWARE

When running the **SigNow** software and connecting to the device, the following screen will appear:

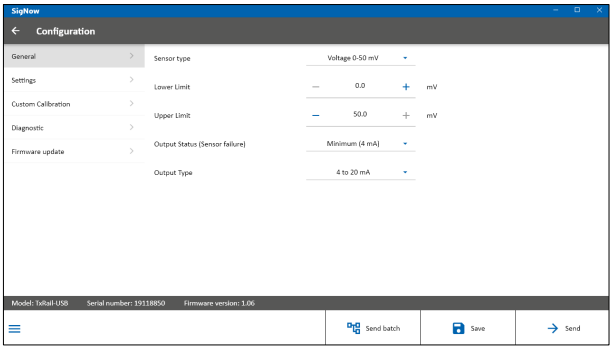

Figure 3 – **SigNow** configuration screen

The bottom part of the screen displays information about the model, serial number, and firmware version.

The configuration screen is divided into 5 sections: General, Settings, Custom Calibration, Diagnostics, and Firmware Update.

In the General (see above) and Settings screens, you can configure the device by setting values and information for the following parameters:

1. **Sensor Type**: Allows you to select the sensor to be used. See **Table 1**.
2. **Lower Limit**: Allows you to select the desired temperature for minimum retransmission value.
3. **Upper Limit**: Allows you to select the desired temperature for maximum retransmission value.
4. **Output Status (Sensor Failure)**: Allows you to establish the output behavior when the transmitter indicates a failure:

   Minimum: Output current goes to < 3.8 mA or output voltage is 0 V (down-scale). Typically used for refrigeration.

   Maximum: Output current goes to > 20.5 mA or output voltage is 10 V (up-scale). Typically used for heating.
5. **Output Type**: Allows you to select the output type to be used.
6. **Offset (Zero Adjustment)**: Allows you to correct small deviations presented in the transmitter output, such as when a sensor is replaced.

In the **SigNow** manual, available on **NOVUS** website, you can get more specific information about the buttons and the process of diagnostics and firmware update.

3.1.2 TXCONFIG II SOFTWARE

When running the **TxConfig II** software and connecting to the device, the following screen will appear:

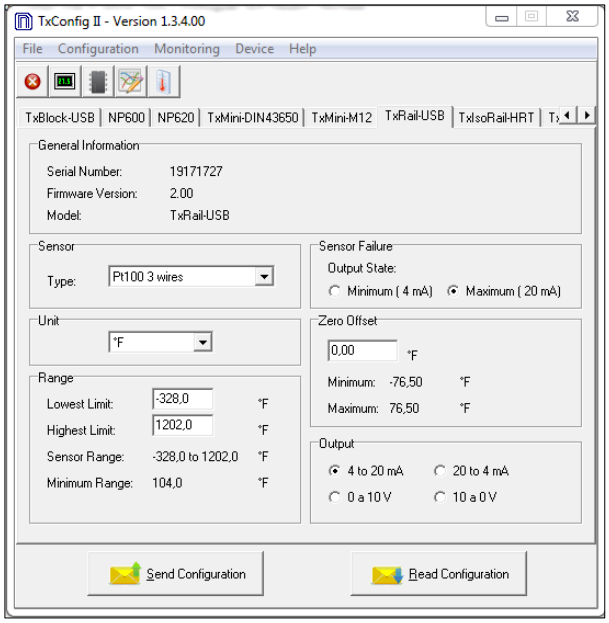

Figure 4 – **TxConfig II** software main screen

The fields in the screen mean:

1. **General Information**: This field contains the data that identifies the transmitter. During requests for technical assistance, this information should be presented to the manufacture.
2. **Sensor**: Allows you to select the sensor to be used. See **Table 1**.
3. **Measuring Range**: Allows you to set the transmitter measurement range.
4. **Lower Range Limit**: Allows you to select the desired temperature for minimum retransmission value.
5. **Upper Range Limit**: Allows you to select the desired temperature for maximum retransmission value.
6. **Sensor Range**

   The values chosen cannot exceed the **sensor range** shown in this field. See **Table 1**.
7. **Minimum Range**

   Do not set a lower band (span) that the **Minimum Range** indicated below in this same field. See **Table 1** of this manual.
8. **Sensor Failure**: Allows you to establish the output behavior when the transmitter indicates a failure:

   Minimum: Output current goes to < 3.8 mA or output voltage is 0 V (down-scale). Typically used for refrigeration.

   Maximum: Output current goes to > 20.5 mA or output voltage is 10 V (up-scale). Typically used for heating.
9. **Zero Correction**: Allows you to correct small deviations presented in the transmitter output, such as when a sensor is replaced.
10. **Send Configuration**: It applies the new setup. Once sent, the setup will be immediately adopted by the transmitter.
11. **Read Configuration**: It reads the current setup in the transmitter connected. The screen now presents the current setup that may be changed by the user.

3.1.3 SIGNOW APPLICATION

When running the **SigNow** application and connecting to the device, the following screen will appear:

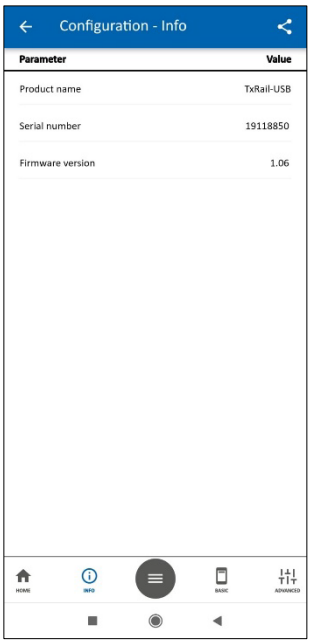

Figure 5 – Information screen

Here you can see information about the device, such as name, serial number, and firmware version.

By opening the **Basic** section or the **Advanced** section, you can configure the parameters displayed in the SIGNOW SOFTWARE section.

In the **SigNow** manual, available on the **NOVUS** website, you can get more specific information about the buttons and the process of diagnostics and firmware update.

3.2 FACTORY SETTING

- Sensor: Pt100 3-wire, range: 0 to 100 °C.
- Sensor failure: Upscale (maximum).
- 0 °C zero correction.
- Unit: °C.
- Output: 4-20 mA.

4. SMARTPHONE CONNECTIONS

Smartphones with On the Go (OTG) technology can be directly connected to the device via the Micro-USB input. This allows the smartphone to recognize and configure the **TxRail-USB** when running the **SigNow** application.

As can be seen in **Figure 6**, it is necessary to observe how the On the Go cable is connected to the device:

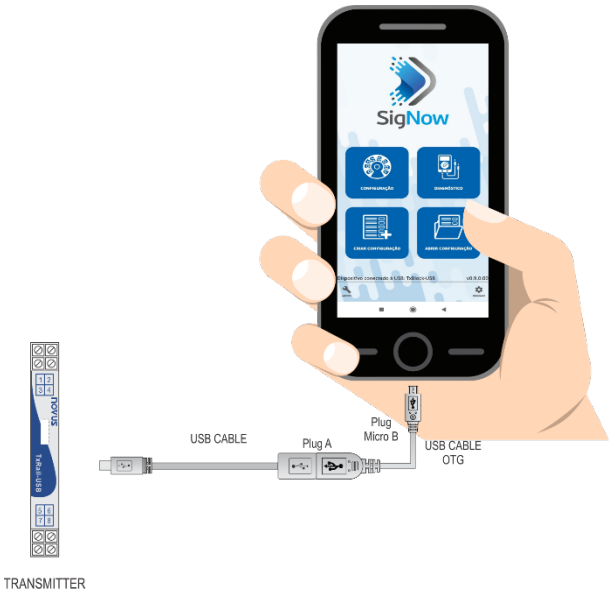

Figure 6 – On the Go connection cable

⚠	**If you position the cable end incorrectly, it is possible that the device will not be recognized by the application.**

4.1 CONFIGURING TXRAIL-USB WITH SIGNOW APPLICATION

Once the connection between the smartphone and the **TxRail-USB** is made, the device will send the following message:

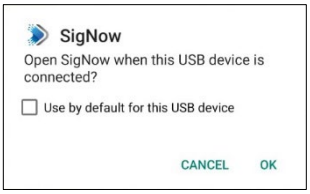

Figure 7 – USB device connected

For the correct operation of the application, you must check the option "Use by default for this USB device" and then click the **OK** button.

After that, it will automatically run the **SigNow** application, which has already been previously installed on the smartphone, and will display the following message:

Figure 8 – **SigNow** home screen

When you click on the **Configuration** option, the application will connect to the device and allow you to configure the **TxRail-USB**.

5. MECHANICAL INSTALLATION

The **TxRail-USB** transmitter is suitable to be installed in 35 mm DIN rail. Vibrations, moisture and extreme temperatures, electro-magnetic interference, high voltage, and other interferences can permanently damage the device and could cause error in the measured value.

5.1 DIMENSIONS

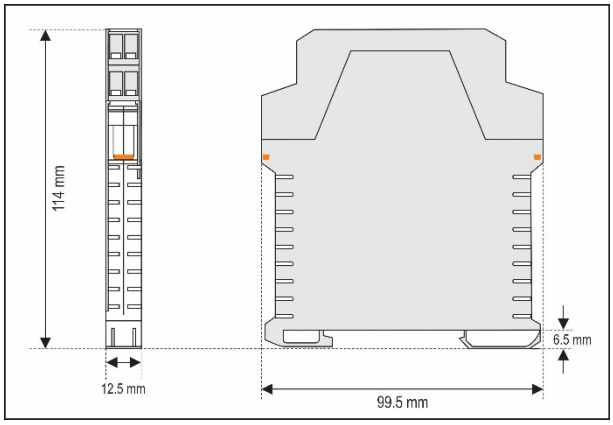

Figure 9 – Transmitter dimensions

5.2 OPENING THE TRANSMITTER

To open the transmitter, you must press the orange lockers located on both sides of the enclosure and pull the frontal cover very carefully, just like shown in **Figure 10**:

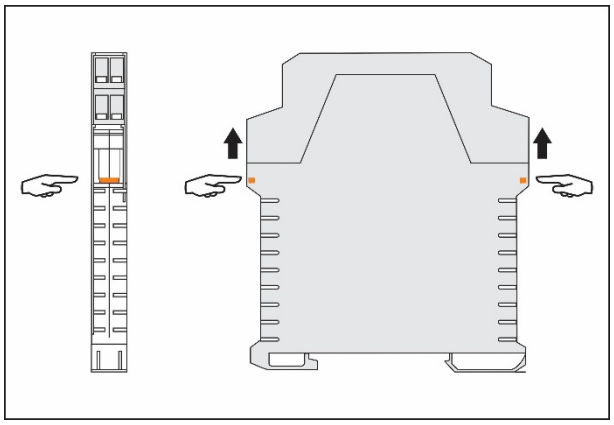

Figure 10 – Opening the transmitter

5.3 REMOVING THE CONNECTORS

The connectors on the transmitter are detachable and can be removed by hand or using a screwdriver:

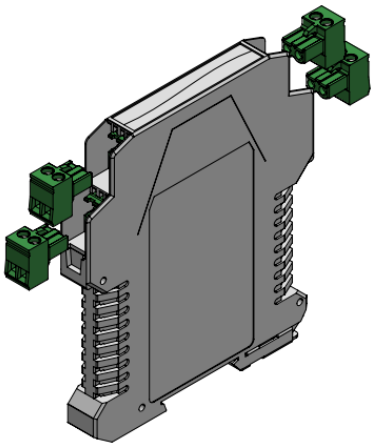

Figure 11 – Detachable connectors

6. ELECTRICAL INSTALLATION

Figure 11 shows the electrical connections required. The **TxRail-USB** wiring for thermocouple, RTD, resistance, and voltage are done according figure below:

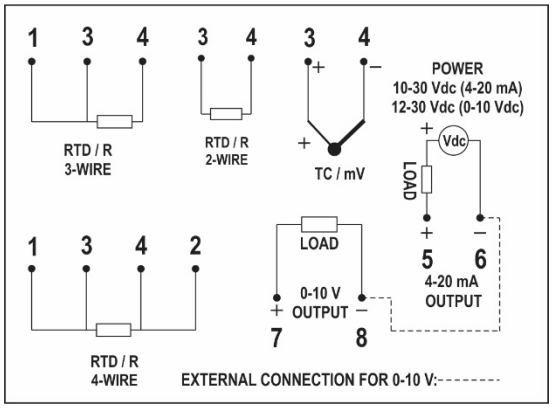

Figure 12 – Electrical connections

LOAD represents the 4-20 mA current or the 0-10 V voltage measuring device (indicator, controller, data logger etc.).

- Polyamide housing.
- Section of the cable used: 0.14 to 1.5 mm².
- Recommended torque in the terminal: 0.8 Nm.

6.1 INSTALLATION RECOMMENDATIONS

- Sensor signals conductors must go through the plant system separate from power leads (loop). If possible, in grounded conduits.
- The instruments must be powered from the instrumentation power supply circuit.
- In control and monitoring applications is essential to consider what can happen when any part of the system fails.
- It is recommended the use of suppressors in contact coils, solenoids, and any inductive load.

6.2 ELECTRICAL CONNECTIONS

The figures below show the electrical connections required. The terminals 1, 2, 3 and 4 are dedicated to the sensor connection. **LOAD** represents the 4-20 mA current or 0-10 V voltage measuring device (indicator, controller, data logger etc.).

6.2.1 PT100 / PT1000 2-WIRE / NTC

Note: When using the Pt100 / Pt1000 2-wire, terminals 1 and 3 must be interconnected, as shown in the figure below.

To use the Pt100 / Pt1000 2-wire, you need to configure the Pt100 / Pt1000 3-wire option in **SigNow** or **TxConfig II** software or in the **SigNow** application.

To avoid errors in the cable resistance, the Pt100 / Pt1000 cable length **should be less than 30 cm**.

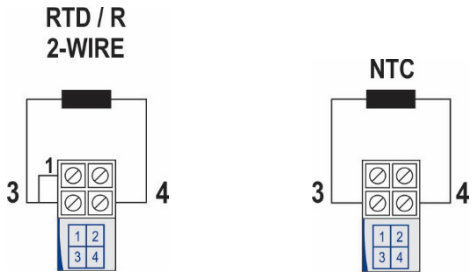

Figure 13 – Pt100 / Pt1000 2-wire / NTC

6.2.2 PT100 / PT1000 3-WIRE

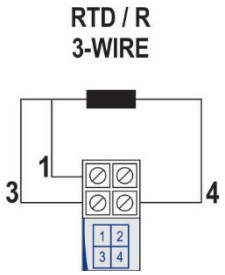

Figure 14 – Pt100 / Pt1000 3-wire

6.2.3 PT100 4-WIRE

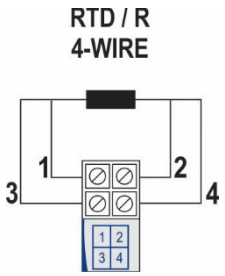

Figure 15 – Pt100 4-wire

Pt100 3 and 4-wire: To properly compensate for the RTD cable resistances, they must be equal on all terminals and must not exceed

25 Ω per cable. To ensure these conditions, it is recommended to use a 3 or 4 wire cable with the same length and gauge.

6.2.4 THERMOCOUPLES

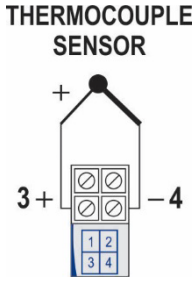

Figure 16 – Thermocouple

6.2.5 VOLTAGE (0-50 mV / 0-100 mV)

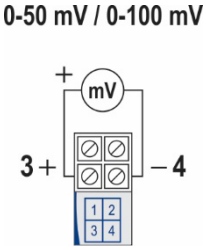

Figure 17 – 0-50 mV / 0-100 mV

6.2.6 OUTPUTS (0-10 V AND 4-20 mA)

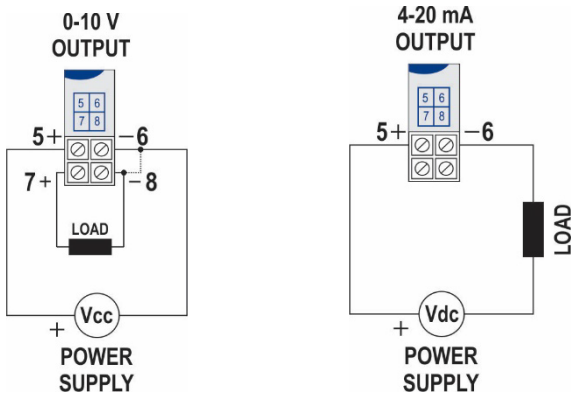

Figure 18 – 0-10 V and 4-20 mA

7. OPERATION

You can change the sensor offset through the **SigNow** or **TxConfig II** software or the **SigNow** app.

The USB cable may be connected to the transmitter without causing any measurement errors (see information about the **Offset (Zero Adjustment)** parameter in the CONFIGURATION chapter).

You must choose the most suitable sensor and range to the process. The chosen range must not exceed the maximum range of measurement defined for the sensor and should not be smaller than the minimum range for the same sensor.

It is important to note that the transmitter accuracy is based on the maximum range of the sensor used, even when a narrower range is programmed.

Example:

- If the Pt100 sensor is in the range 0 to 100 °C and the accuracy is 0.12 %, there is a maximum error of up to 1.02 °C (0.12 % of 850 °C).
- If the Pt100 sensor is in the range 500 to 600 °C and the accuracy is 0.19 %, there is a maximum error of up to 1.61 °C (0.19 % of 850 °C).

Note: When measurements are made at the transmitter, make sure that the excitation current of Pt100 required by the calibrator used is compatible with the excitation current of Pt100 used in the transmitter: 0.8 mA.

8. WARRANTY

Warranty conditions are available on our website www.novusautomation.com/warranty.